LONGi SOLAR

Hi-MO X10 Scientist

LR8-66HVD

640~670M

Advanced:
TOP Efficiency,+5% Power,More Yield.

Value-Added:
A+ Anti-Shading[1],Less Loss.

Aesthetic:
No Gridlines,Scenario Integration.

Safe:
Prevent Overheating,Lower temperature under shade 60℃+[2] compare with conventional modules

HPBC 2.0 | TaiRay | N-type

Bifacial Power Generation

15Y Product Warranty | **30Y** Performance Warranty

Complete System and Product Certifications

IEC 61215,IEC 61730

IEC62941:Guideline for module design qualification and type approval

ISO9001:Quality Management System

ISO14001:Environment Management System

ISO45001:Occupational Health and Safety

TÜVRheinland CERTIFIED | TÜV SÜD | CE | TIER 1 Bloomberg NEW ENERGY FINANCE



Hi-MO X10 Scientist

LR8-66HVD 640~670M

24.80%	1%	0.35%	-0.26%/℃
MAX MODULE EFFICIENCY	FIRST YEAR POWER DEGRADATION	YEAR 2-30 POWER DEGRADATION	BETTER TEMPERATUR COEFFICIENT

Mechanical Parameters

Cell Orientation	132 (6×22)
Junction Box	IP68, three diodes
Output Cable	4mm²; +400/-200mm/±1400mm length can be customized
Glass	Dual glass, 2.0+2.0mm semi-tempered glass
Frame	Anodized aluminum alloy frame
Weight	32.5 kg
Dimension	2382×1134×30mm
Packaging	36pcs per pallet / 144pcs per 20'GP / 720pcs per 40'HC

Remark: 17.5m trucks are rated at 30t load. Actual loading quantity is subject to vehicle specs.

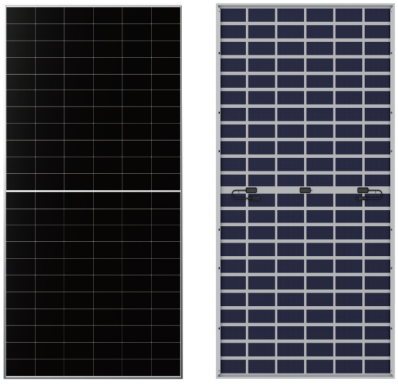

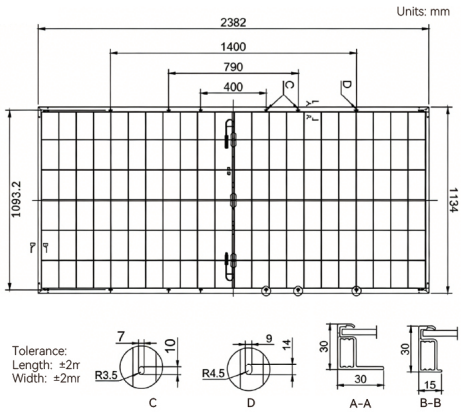

Electrical characteristics with different rear side power gain

Pmax/W	Voc/V	Isc/A	Vmp/V	Imp/A	Pmax gain
645	49.62	16.46	40.88	15.78	0%
677	49.62	17.28	40.88	16.57	5%
710	49.62	18.11	40.88	17.36	10%
744	49.72	18.93	40.98	18.15	15%
776	49.72	19.75	40.98	18.94	20%
808	49.72	20.58	40.98	19.73	25%

Electrical Characteristics

·STC: Irradiance1000W/m², Cell Temperature 25℃, AM1.5 (Test uncertainty for Pmax: ±3%)

Module Type	LR8-66HVD-640M	LR8-66HVD-645M	LR8-66HVD-650M	LR8-66HVD-655M	LR8-66HVD-660M	LR8-66HVD-665M	LR8-66HVD-670M
Testing Condition	STC	STC	STC	STC	STC	STC	STC
Maximum Power (Pmax/W)	640	645	650	655	660	665	670
Open Circuit Voltage (Voc/V)	49.52	49.62	49.72	49.82	49.92	50.02	50.12
Short Circuit Current (Isc/A)	16.38	16.46	16.54	16.62	16.70	16.78	16.86
Voltage at Maximum Power (Vmp/V)	40.78	40.88	40.98	41.08	41.18	41.28	41.38
Current at Maximum Power (Imp/A)	15.69	15.78	15.86	15.94	16.03	16.11	16.19
Module Efficiency (%)	23.69	23.88	24.06	24.25	24.43	24.62	24.80

Operating Parameters

Module [T98] Max	70℃
Operational Temperature	-40℃ ~ +85℃
Power Output Tolerance	0~3%
Maximum System Voltage	DC1500V (IEC)
Maximum Series Fuse Rating	35A
Nominal Operating Cell Temperature	45±2℃
Protection Class	Class II
Bifaciality	φPmax: 75±5%
Fire Rating	IEC Class C

Mechanical Loading

Min Designed Mechanical Load	1600Pa/1600Pa
Front Side Maximum Static Loading	5400Pa
Rear Side Maximum Static Loading	2400Pa
Hailstone Test	25mm Hailstone at the speed of 23m/s

Temperature Ratings (STC)

Temperature Coefficient of Isc	+0.050%/℃
Temperature Coefficient of Voc	-0.200%/℃
Temperature Coefficient of Pmax	-0.260%/℃

LONGi SOLAR

①Data Source:TUV CN250XRQ 001 Shadow Shading Test Report, Anti-shading effect vary due to differences in test irradiation conditions, temperature, software, etc.

②Data Source:IEC 61215-2:2021, MQT 09 Hot Spot Test. A comparison was made between the test temperatures of Hi-MO X10 and conventional modules. Test data may vary due to differences in tested modules and institutions.

Specifications included in this datasheet are subject to change without notice.LONGi reserves the right of final interpretation. (BGV03 20260509)